3.6

# FD...L2X TYPE

## CHECK-Q-METER VALVE

| Nominal size | 12 | 16 | 25 | 32 |
|---|---|---|---|---|
| Rated pressure(bar) | 350 | 350 | 350 | 350 |
| Rated flow(L/min) | 80 | 200 | 320 | 560 |

## Benefits:

- Installation in manifolds (cartridge valve)
- With SAE flange ports
- Sub-plate connection or block, porting pattern to DIN 24340 form D, ISO 5781 and CETOP-RP 121 H
- Check valve pilot operated (leakage-free)
- The check-Q-meter controls the returning flow $Q_{V2}$ in relation to the flow $Q_{V1}$ in the inlet port of actuator. For the application in cylinders system, the area ratio ($Q_{V2} = Q_{V1} \cdot \Phi$) has to be taken into account
- Bypass valve, free flow in opposite direction
- Safety valve, optional (Only for valve with flange port and special plate valve type FD12 and FD16)

# Contents


| | Page |
|---|---|
| Function | 03 |
| Symbols | 04 |
| Specification | 04 |
| Curcuit examples | 05 |
| Technical Data | 06 |
| Characteristic curves | 06 |
| Unit dimension | 07-12 |
| · installation in manifolds (cartridge valve) | 07 |
| · SAE flange, without safety valve | 08 |
| · SAE flange, with safety valve | 09 |
| · Sub-plate mounting valve | 10 |
| · Special sub-plate amounting check-q-meter , with safety valve | 11 |
| · Sub-plate for special check-Q-meter with safety valve | 12 |

# Function

Check-Q-meters are used to prevent runaway of hydraulic cylinder and motor in hydraulic system. They can also prevent pipe bursting.
Check-Q-meter basically consists of the housing (1), main poppet (2), pilot part (3), steel ball(11), pilot spool (4), spring seat (5) and damping (6). When load is lifted, fluid flows from A to B, the main spool (2) is opened. If pipe is cracked caused by the system, main spool (2) closes immediately because chamber (8) is connected with load pressure.

**Lowering the load (circuit examples)**
The direction of flow is from B to A. Port A is connected to tank via the directional valve. The piston rod side of the cylinder has a flow applied which corresponds to the working conditions. The relationship between the control pressure at port X and the load pressure at port B = 1:20.
When the control pressure is reached, the main spool opens. Via the control spool (4) the pilot stage (3) and steel ball (11) are lifted off its seat and chamber (8) is de-compressed via its internal hole and port A to tank. At the same time the load pressure in port B is no longer applied to chamber (8), this is due to the longitudinal movement of the pilot stage (3) within the main spool. The main poppet (2) is thereby unloaded. The reverse side of the control spool (4) at the main poppet (2) , lies against the collar edge of the damping spool (5).
In order to open the main poppet, the pressure in the port X is decided by the spring in the chamber (9). When the valve open, the pressure is 20bar, and fully open it is 60bar.
The opening cross-section for flow control increases progressively. It is created by the successive opening of radial hole in the sleeve (12) and the main poppet (2) land.
The relationship between the control pressure, cracking pressure and differential pressure determines the flow to the actuator via the connection of B to A. Thus uncontrolled running away of the actuator is prevented.
The controlled lowering procedure is not affected even if there is a pipe burst between the directional valve and port A.

**Guidelines for influencing the opening and closing times of the check-Q-meter.**
- Throttling of the opening sequence is via orifice (6) in the control spool (4) and both sides of the damping spool (5). The orifice (6) is protected by sieves (10).
- The closing movement of the check-Q-meter is virtually unthrottled.
- When being used in conjunction with cylinders the control line to port X can be fitted with a throttle check valve (meter-out control) to influence the closing sequence.
- When being used in conjunction with motors a throttle check valve should not be fitted in the control line to port X. In this case it is recommended that the control time of the directional valve are influenced.



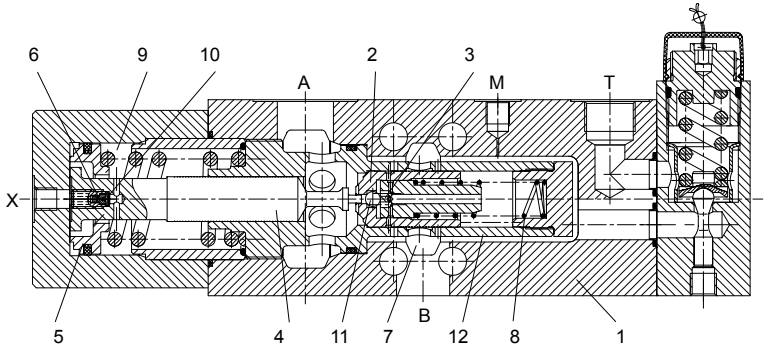

## Symbols

Without safety valve

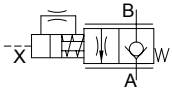


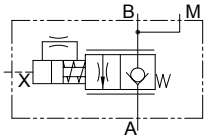


With safety valve

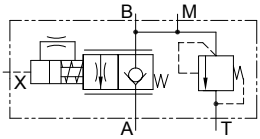


## Specification

| FD | | – L2X / | / | | * |
|---|---|---|---|---|---|

Check-Q-meter

Nominal size 12 = 12
Nominal size 16 = 16
Nominal size 25 = 25
Nominal size 32 = 32

Cartridge valve =KA
Sub-plate mounting =PA
Flange connections without safety valve=FA
Flange connections with safety valve =FB

Series L20 to L29 =L2X
(L20 to L29: unchanged installation and connection dimensions)

Pressure setting range of safety valve
(Only for valve with flange port and special valve type FD12 and FD16)
Pressure setting up to 200bar =200
Pressure setting up to 300bar =300
Pressure setting up to 400bar =400

Further details in clear text

No code = NBR seals
V = FKM seals

External connection
threaded connection(X, M, T)
No code = Inch thread
2 = Metric thread

B00 = Without orifice
B03 = Orifice Ø 0.3 mm (sizes 12 and 16)
B04 = Orifice Ø 0.4 mm (size 25)
B06 = Orifice Ø 0.6 mm (size 32)
(other orifice diameters on request)

Relief setting:
at least 1.3 times the highest expected load !

# Curcuit examples

**Cylinder with single rod**

On safety grounds, a closed in-between position directional valve should always be used!

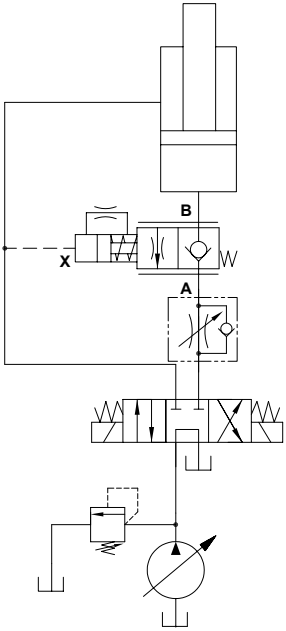


**Hydraulic motor**

To make sure that brake can be operated, both of the directional valve ports have to be connected to the tank in the in-between position. If the brake is externally unloaded then it is possible to use a closed in-between position directional valve.

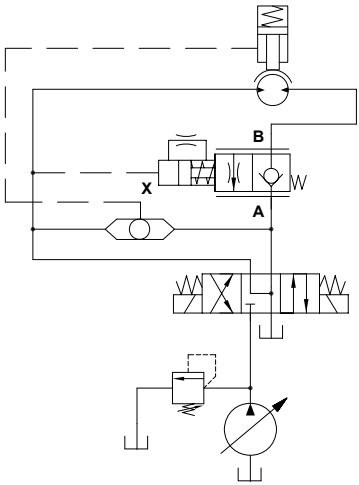


**Notes:** It is not allowed to use two check-Q-meters to control two synchronized cylinders, as same synchronisation pressure cannot be guaranteed in each cylinder. Therefore, two pilot operated check valves, type SL should be equipped in cylinders. The check-Q-meter is fitted in a common line.
In this case, the load pressure must not exceed 200bar!

To avoid the vibration because of too quick descent causing pressure lost at port X, a check throttle valve is commended to externally connect to Port A to limit the descent speed.

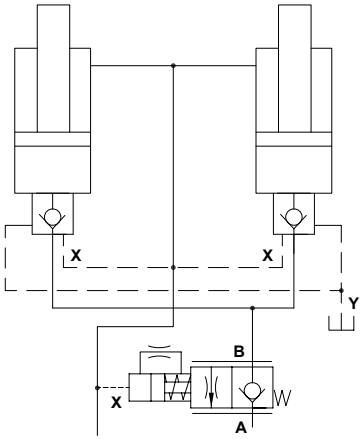

## Technical data

| | | |
|---|---|---|
| Fluid | | Mineral oil |
| | | Phosphate ester |
| Fluid temperature range | °C | -20 to +80 |
| Viscosity range | $mm^2/s$ | 10 to 800 |
| Degree of contamination | | Maximum permissible degree of fluid contamination: Class 9. NAS 1638 or 20/18/15, ISO4406 |
| Operating pressure, ports A, X | bar | to 350 |
| Operating pressure, port B | bar | to 420 |
| Pilot pressure, port X (flow control range) | bar | min.20~60, max.350 |
| Cracking pressure, A to B | bar | 2 |
| Setting pressure for secondary pressure relief valve | bar | to 400 |
| Flow -rate | L/min | 80(size 12),200(size 16),320(size 25),560(size 32) |
| Area ratio of the pre-opening | | poppet seat area 1 |
| | | area of pilot spool 20 |

## Characteristic curves (Measured at t=40°C ±5°C , using HLP46)

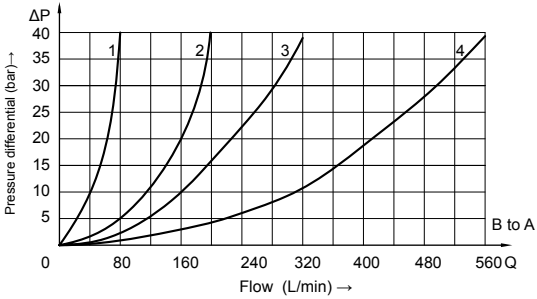


Pressure differential
P in relation to flow Q,
measured at throttle position:
Throttle fully open (Px=60bar)

1 = size 12
2 = size 16
3 = size 25
4 = size 32

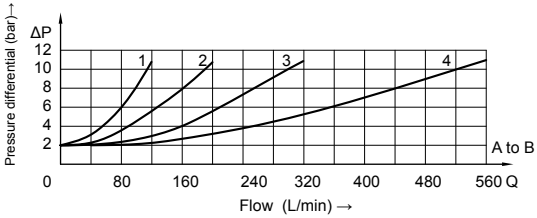


Pressure differential
P in in relation to flow Q,
measured over the check valve

# Unit dimensions

(Dimensions in mm)

## ·Installation in manifolds (cartridge valve)

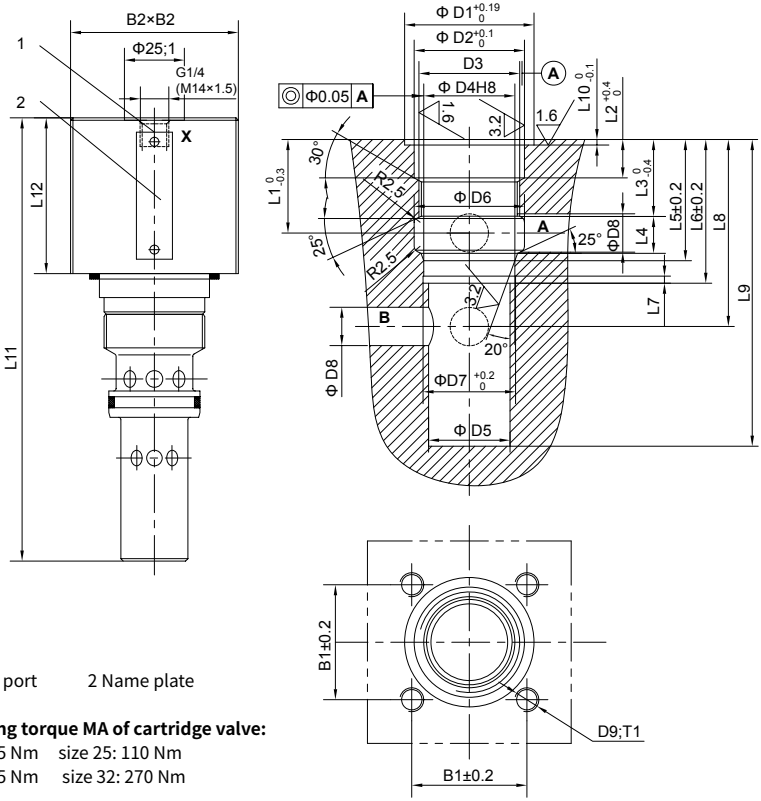


1 Control port 2 Name plate

**Tightening torque MA of cartridge valve:**
size 12: 65 Nm size 25: 110 Nm
size 16: 65 Nm size 32: 270 Nm

Ports A and B can be optionally arranged about the circumference.
Attention! The valve fixing holes must not be damaged.

**Note:** the cartridge valve is incompact structure but not integral, so when fixing, it can refer to "Page 03/14". First fix the sleeve with thread, then fix other components, and the cover is last.

| Type | B1 | B2 | D1 | D2 | D3 | D4 | D5 | D6 | D7 | D8 | D9 | T1 | L1 | L2 | L3 | L4 | L5 |
|---|---|---|---|---|---|---|---|---|---|---|---|---|---|---|---|---|---|
| FD12KA10 | 48 | 70 | 54 | 46 | M42×2 | 38 | 34 | 46 | 38.6 | 16 | M10 | 16 | 39 | 16 | 32 | 15.5 | 50.5 |
| FD16KA10 | 48 | 70 | 54 | 46 | M42×2 | 38 | 34 | 46 | 38.6 | 16 | M10 | 16 | 39 | 16 | 32 | 15.5 | 50.6 |
| FD25KA10 | 56 | 80 | 60 | 54 | M52×2 | 48 | 40 | 60 | 48.6 | 25 | M12 | 19 | 50 | 19 | 39 | 22 | 65 |
| FD32KA10 | 66 | 95 | 72 | 65 | M64×2 | 58 | 52 | 74 | 58.6 | 30 | M16 | 23 | 52 | 19 | 40 | 25 | 71 |

| Type | L6 | L7 | L8 | L9 | L10 | L11 | L12 | Valve fixing screws/Tighting torque | $M_A$(Nm) | Wight |
|---|---|---|---|---|---|---|---|---|---|---|
| FD12KA10 | 60 | 3 | 78 | 128 | 2.3 | 191 | 65 | 4 pcs M10×70 GB/T70.1-10.9 | 69 | 2.8kg |
| FD16KA10 | 60 | 3 | 78 | 128 | 2.3 | 191 | 65 | 4 pcs M10×70 GB/T70.1-10.9 | 69 | 2.8kg |
| FD25KA10 | 80 | 4 | 105 | 182 | 2.3 | 253 | 75 | 4 pcsM12×80 GB/T70.1-10.9 | 120 | 5.6kg |
| FD32KA10 | 85 | 4 | 115 | 198 | 2.3 | 289 | 94 | 4 pcsM16×100 GB/T70.1-10.9 | 295 | 7.5kg |

# Unit dimensions

(Dimensions in mm)

## ·SAE flange, without safety valve

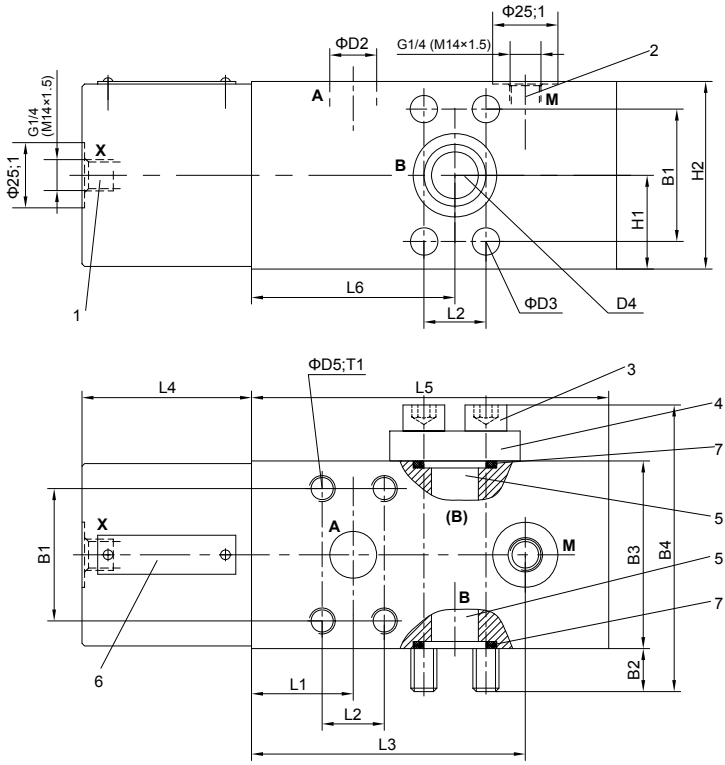


**SAE flange connection:**
Operating pressure : 420bar
Flange mounting screws and blanking flange are included within the scope of supply.

1 Control port
2 Measuring port
3 Flange fixing screws
4 Cover
5 Optional port B
6 Name plate
7 O-ring

| Type | B1 | B2 | B3 | B4 | D1 | D2 | D3 | D4 | D5 | H1 | H2 | L1 | L2 | L3 | L4 |
|---|---|---|---|---|---|---|---|---|---|---|---|---|---|---|---|
| FD12FA10 | 50.8 | 16.5 | 72 | 110 | 43 | 18 | 10.5 | 18 | M10 | 36 | 72 | 39 | 23.8 | 105 | 65 |
| FD16FA10 | 50.8 | 16.5 | 72 | 110 | 43 | 18 | 10.5 | 18 | M10 | 36 | 72 | 39 | 23.8 | 105 | 65 |
| FD25FA10 | 57.2 | 14.5 | 90 | 132 | 50 | 25 | 13.5 | 25 | M12 | 45 | 90 | 50 | 27.8 | 148 | 75 |
| FD32FA10 | 66.7 | 20 | 105 | 154 | 56 | 30 | 15 | 30 | M14 | 50 | 105 | 52 | 31.8 | 155 | 94 |

| Type | L5 | L6 | T1 | Weight | O-ring(7) | Valve fixing screws |
|---|---|---|---|---|---|---|
| FD12FA10 | 140 | 78 | 15 | 7kg | 25×3.5 | 4 pcs M10×100 GB/T70.1-10.9 |
| FD16FA10 | 140 | 78 | 15 | 7kg | 25×3.5 | 4 pcs M10×100 GB/T70.1-10.9 |
| FD25FA10 | 200 | 105 | 18 | 16kg | 32.92×3.53 | 4 pcs M12×120 GB/T70.1-10.9 |
| FD32FA10 | 215 | 115 | 21 | 21kg | 37.7×3.53 | 4 pcs M14×140 GB/T70.1-10.9 |

# Unit dimensions

(Dimensions in mm)

## ·SAE flange, with safety valve

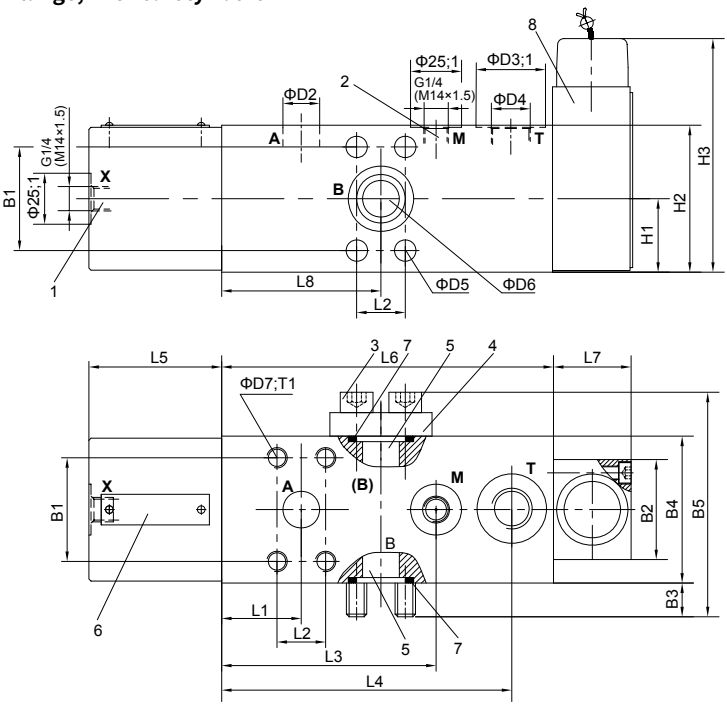


**SAE flange connection:**
Operating pressure : 420bar
Flange mounting screws and blanking flange are included within the scope of supply.

1 Control port
2 Measuring port
3 Flange fixing screws
4 Cover
5 Optional port B
6 Name plate
7 O-ring
8 Safety valve

| Type | B1 | B2 | B3 | B4 | B5 | D1 | D2 | D3 | D4 | | D5 | D6 | D7 | H1 | H2 | H3 | L1 |
|---|---|---|---|---|---|---|---|---|---|---|---|---|---|---|---|---|---|
| | | | | | | | | | Inch | Metric | | | | | | | |
| FD12FB10 | 50.8 | 49 | 16.5 | 72 | 110 | 43 | 18 | 34 | G1/2 | M22×1.5 | 10.5 | 18 | M10 | 36 | 72 | 118 | 39 |
| FD16FB10 | 50.8 | 49 | 16.5 | 72 | 110 | 43 | 18 | 34 | G1/2 | M22×1.5 | 10.5 | 18 | M10 | 36 | 72 | 118 | 39 |
| FD25FB10 | 57.2 | 78 | 14.5 | 90 | 132 | 50 | 25 | 42 | G3/4 | M27×2 | 13.5 | 25 | M12 | 45 | 90 | 145 | 50 |
| FD32FB10 | 66.7 | 78 | 20 | 105 | 154 | 56 | 30 | 42 | G3/4 | M27×2 | 15 | 30 | M14 | 50 | 105 | 145 | 52 |

| Type | L2 | L3 | L4 | L5 | L6 | L7 | L8 | T1 | Weight | O-ring( 7 ) | valve fixing screws |
|---|---|---|---|---|---|---|---|---|---|---|---|
| FD12FB10 | 23.8 | 105 | 141.5 | 65 | 162 | 38 | 78 | 15 | 9kg | 25×3.5 | 4 pcs M10×100 |
| FD16FB10 | 23.8 | 105 | 141.5 | 65 | 162 | 38 | 78 | 15 | 9kg | 25×3.5 | 4 pcs M10×100 |
| FD25FB10 | 27.8 | 148 | 198 | 75 | 225 | 50 | 105 | 18 | 18kg | 32.92×3.53 | 4 pcs M12×120 |
| FD32FB10 | 31.8 | 155 | 215 | 94 | 240 | 50 | 115 | 21 | 24kg | 37.7×3.53 | 4 pcs M14×140 |

# Unit dimensions

(Dimensions in mm)

## ·Sub-plate mounting valve

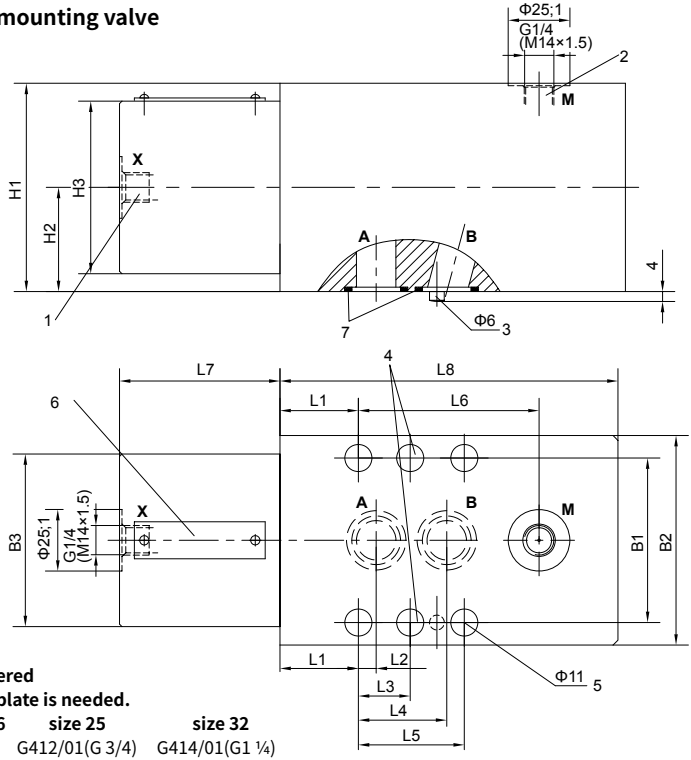


**It must be ordered if connection plate is needed.**

| Sizes 12 and 16 | size 25 | size 32 |
|---|---|---|
| G460/01(G 3/8) | G412/01(G 3/4) | G414/01(G1 ¼) |
| G461/01(G1/2) | G413/01 (G1) | G415/01(G1 ½) |

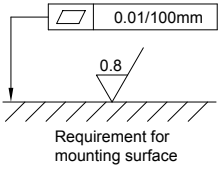


**Notes:**

Only use a sub-plate mounting valve for panel mounting!

1 Control port
2 Measuring port
3 Locating pin
4 Not for sizes 12, 16 and 25
5 4 valve fixing holes for sizes 12, 16 and 25
6 valve fixing holes for size 32
6 Name plate

| Type | B1 | B2 | B3 | H1 | H2 | H3 | L1 | L2 | L3 | L4 | L5 | L6 |
|---|---|---|---|---|---|---|---|---|---|---|---|---|
| FD12PA10 | 66.7 | 85 | 70 | 85 | 42.5 | 70 | 31.8 | 7.2 | - | 35.8 | 42.9 | 73.2 |
| FD16PA10 | 66.7 | 85 | 70 | 85 | 42.5 | 70 | 31.8 | 7.2 | - | 35.8 | 42.9 | 73.2 |
| FD25PA10 | 79.4 | 100 | 80 | 100 | 50 | 80 | 38.9 | 11.1 | - | 49.2 | 60.3 | 109.1 |
| FD32PA10 | 96.8 | 120 | 95 | 120 | 60 | 95 | 35.3 | 16.7 | 42.1 | 67.5 | 84.2 | 119.7 |

| Type | L7 | L8 | Valve fixing screws/tighting torque | $M_A$(Nm) | Weight | O-ring(7) |
|---|---|---|---|---|---|---|
| FD12PA10 | 65 | 140 | 4 pcs M10×100 GB/T70.1-10.9 | 75 | 9kg | 21.3×2.4 |
| FD16PA10 | 65 | 140 | 4 pcs M10×100 GB/T70.1-10.9 | 75 | 9kg | 21.3×2.4 |
| FD25PA10 | 75 | 200 | 4 pcs M10×120 GB/T70.1-10.9 | 75 | 18kg | 29.82×2.62 |
| FD32PA10 | 94 | 215 | 6 pcs M10×140 GB/T70.1-10.9 | 75 | 24kg | 38×3 |

# Unit dimensions

(Dimensions in mm)

## · Special sub-plate amounting check-q-meter , with safety valve

Dimension of Check-Q-meter type FD12PB10/...
Dimension of Check-Q-meter type FD16PB10/...

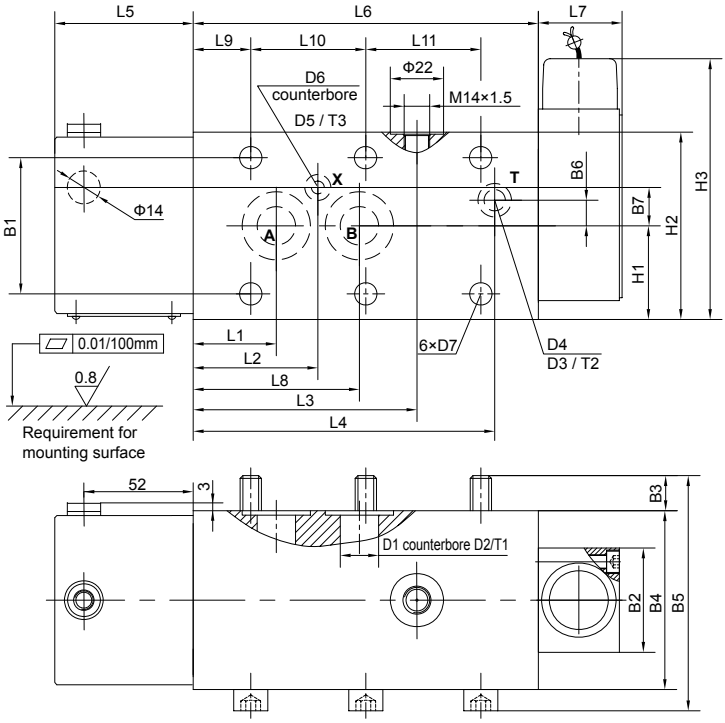


| Type | B1 | B2 | B3 | B4 | B5 | B6 | B7 | D1 | D2 | D3 | D4 | D5 | D6 | D7 |
|---|---|---|---|---|---|---|---|---|---|---|---|---|---|---|
| FD12PB10/... | 64 | 49 | 16 | 84 | 11 | 12.5 | 18 | 18 | 32 | 15.7 | 10 | 12.2 | 6 | 10.5 |
| FD16PB10/... | 64 | 49 | 16 | 84 | 11 | 12.5 | 18 | 18 | 32 | 15.7 | 10 | 12.2 | 6 | 10.5 |

| Type | H1 | H2 | H3 | L1 | L2 | L3 | L4 | L5 | L6 | L7 | L8 | L9 | L10 | L11 |
|---|---|---|---|---|---|---|---|---|---|---|---|---|---|---|
| FD12PB10/... | 44 | 88 | 126 | 39 | 58.5 | 105 | 141.5 | 65 | 162 | 38 | 78 | 27 | 54 | 54 |
| FD16PB10/... | 44 | 88 | 126 | 39 | 58.5 | 105 | 141.5 | 65 | 162 | 38 | 78 | 27 | 54 | 54 |

| Type | T1 | T2 | T3 | Fixing screws | O-ring(7) | | |
|---|---|---|---|---|---|---|---|
| FD12PB10/... | 2.7 | 1.9 | 1.4 | 4pcs M10×100 | 25×3.53 | 12×2 | 9.25×1.78 |
| FD16PB10/... | 2.7 | 1.9 | 1.4 | GB/T70.1-10.9 | 25×3.53 | 12×2 | 9.25×1.78 |

# Unit dimensions

(Dimensions in mm)

## ·Sub-plate for special check-Q-meter with safety valve
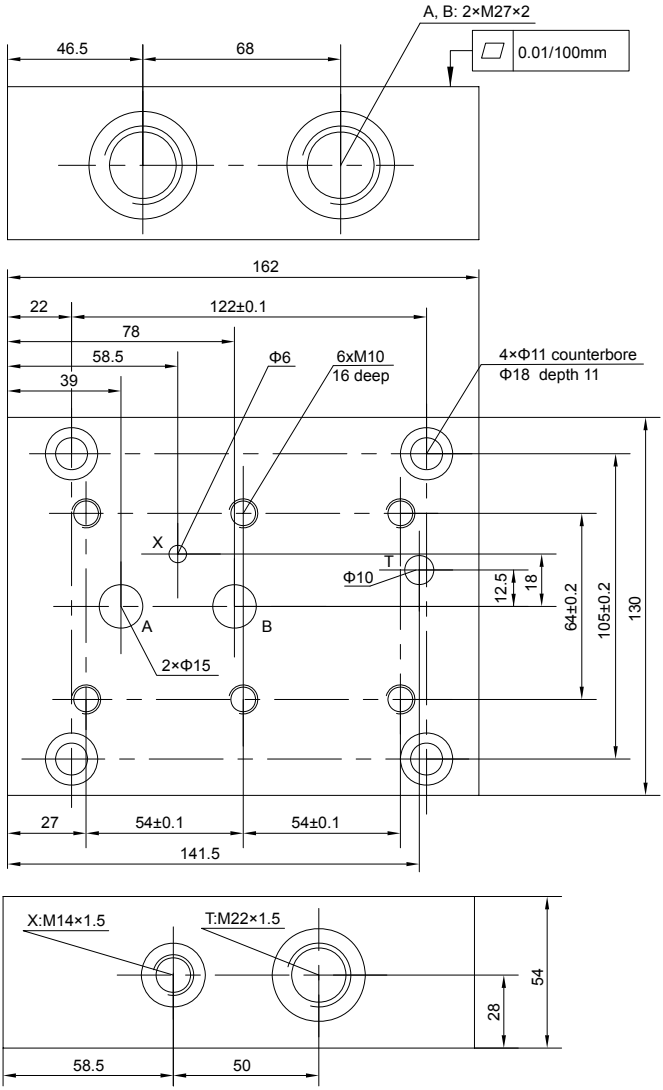
Sub-plate dimension of Check-Q-meter type FD12PB10/...
Sub-plate dimension of Check-Q-meter type FD16PB10/...